eX 3248 – 4765
HB and BH
OWNERS MANUAL

12/15/23

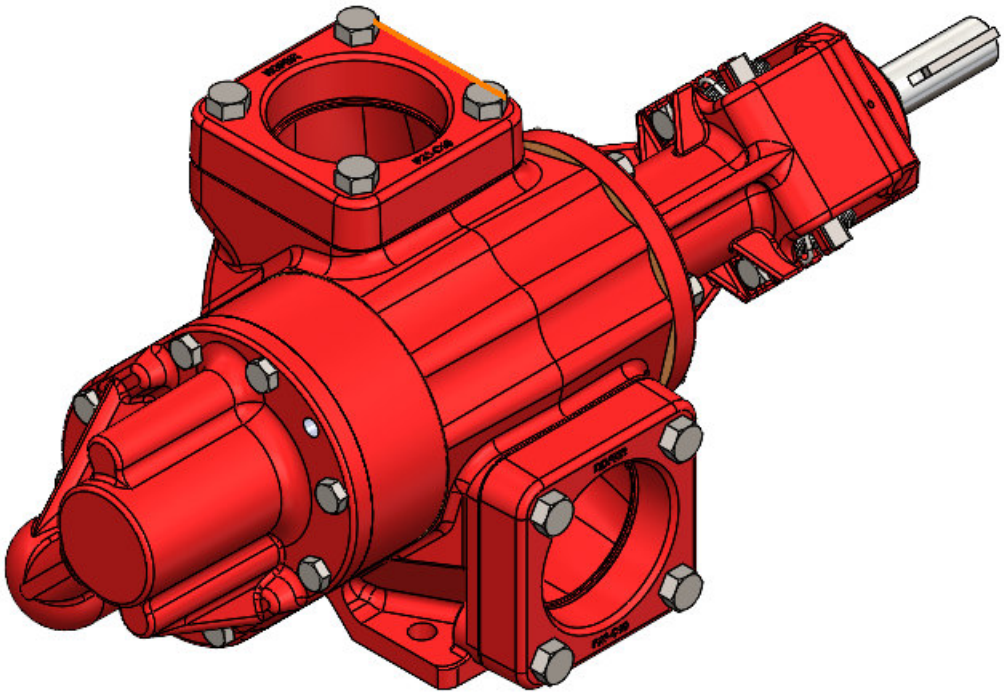

SAFETY INSTRUCTIONS

This is an industrial component. Only a qualified systems integrator should be allowed to design it into a system. The integrator must determine proper plumbing, mounting, driveline, and guard components.

Improper installation or use could lead to a serious, even fatal, accident. The system integrator must communicate all safe operation procedures to the end user(s).

Before operation, fully understand and follow the instructions shown in this manual and any instructions communicated by the system integrator. No one should be allowed to operate or maintain this pump who has not been fully trained to work safely according to the configuration of the pump system and in accordance with all applicable government and industry regulations.

Roper Pump Company
P.O. Box 269
Commerce, GA 30529 USA

Telephone: (706) 335-5551
TeleFAX: (706) 335-5490
Email: sales@roperpumps.com
www.roperpumps.com

Good Practice

NOTE: These are general guidelines and do not cover all possible situations.
It is the responsibility of the system integrator to apply this product properly.

Plumbing

1. The inlet pipe should be as short and straight as possible to minimize suction pressure losses. Excessive restrictions at the inlet can cause cavitation resulting in poor performance, noise, vibration, or pump damage.
2. Slope the inlet plumbing appropriately to avoid air pockets.
3. Plumbing weight, misalignment with the ports or thermal expansion can exert excessive force on the pump. Plumbing must be properly supported and aligned with expansion joints, if required, to minimize these forces.
4. To prevent over pressure situations, install a relief valve as close to the pump outlet as possible. Install the relief valve before any shut-off valves.

Separate Pump and Drive Assemblies

Driveline Guards

1. Assure adequate guards have been installed to prevent personnel contacting moving components.
2. Follow all OSHA, Federal, state and local codes.

Check Alignment of Pump to Driveline

Excessive misalignment can overload the pump input shaft and cause premature failure. The figures below show parallel and angular misalignments.

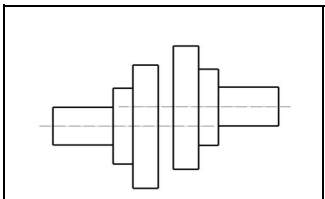

Parallel

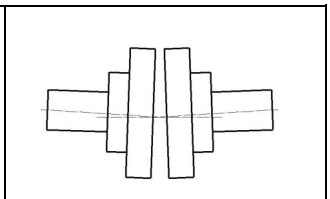

Angular

Mounting Base

1. Mount the unit on a rigid, heavy base to provide support and absorb shock. Bases should be designed for high rigidity, not just strength.
2. The pump feet were not designed for mounting to concrete and do not have enough contact area to prevent concrete from failing. When mounting to cement or concrete, use a steel base plate (supplied by others) to distribute the mounting stress over an area large enough to prevent the cement from failing. The base plate should be at least as thick as the pump feet. Grout it in place.

Roper Pumps' Close Coupled Drives

Hydraulic or Gearmotor units where the drive mounts directly to the pump.

- Driveline is not exposed and does not require guards.
- Alignment between pump and drive line is maintained by the assembly.
- Because the assembly absorbs reaction forces of the driveline, the mounting base does not need to be as robust. The level of rigidity and strength is determined by the piping stresses from the system.

⚠ WARNING

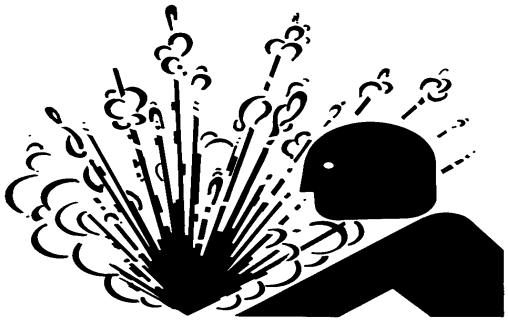

Over-pressure may burst pump or system components. Always include a relief valve in installation. Do not over pressurize pump or block discharge line while running.

⚠ WARNING

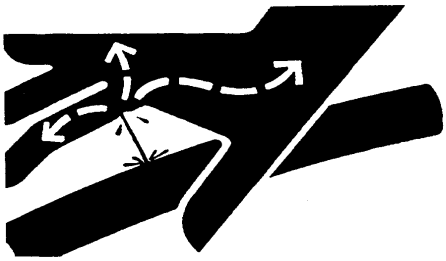

Injection Hazard: Do not try to stop a leak with your hand! Avoid any close contact with hydraulic fluid jets. Escaping fluid can penetrate skin, causing serious injury. In case of accident, see a doctor immediately for removal of fluid.

Guarding PTO Drive Shafts

PTO drive systems can be dangerous and when used, additional safety precautions, including guarding, may be required and must be provided by the drive system installer. Roper Pump Company has no responsibility for recommending or providing proper guarding or other safety measures in any particular application.

The installation of proper guards for the power take-off and its associated equipment is the responsibility of the drive system designer and the installer who know the particular product application and the user's exposure to danger. *The ultimate responsibility for the safe application and installation is the user's.*

1. NAMEPLATE DATA

Roper Pump Company identifies each pump manufactured by a metal nameplate attached to the pump. This nameplate describes the pump as built at the factory. Copy the nameplate data from your pump in the area provided below. Use this for ready reference when ordering repair parts or when consulting with a Roper distributor or Roper Pump Company about this pump.

MODEL NUMBER: _____
SPEC NUMBER: _____
TYPE: _____
SERIAL NUMBER: _____

PUMP NOMENCLATURE

MODEL 3765 HBFRVLX

SPEC XXXXX **TYPE** 3

SERIAL NUMBER ZZZ

1. The Model number consists of a twelve-digit number.

- The first digit (3) indicates the port arrangement.
  - 3 – 3600 Series with right angle ports
  - 4 – 4600 Series with straight through ports
- The second digit (7) indicates shaft sealing.
  - 2 – Triple Lip Seal with back-up packing
  - 7 – SPS Super Cartridge Seal
- The third and fourth digits (65) indicate the approximate theoretical displacement in U.S. gallons per 100 revolutions. Gallons/100 Rev. [Liters/100 Rev.]
  - 48 [181.7]
  - 65 [246.0]
- The letter or group of letters (HB) indicates the pump head arrangement.
  - HB – Pump with outboard bearing
  - BH – Pump without outboard bearing to accommodate close coupled hydraulic drive auxiliaries through a rigid coupling
- The letter (F) indicates port style.
  - F – Pump with Roper standard flange ports
- The letters (RV) indicate type of faceplate on pump.
  - See Section 5, **DIRECTION OF ROTATION AND RELIEF VALVES,** for an explanation of the types of valves available.
  - No letters – Plain faceplate
  - RV – RV style relief valve faceplate (Standard RV, Jacketed RV)
  - BV – BV style bi-directional relief valve faceplate
- The letter or group of letters (X, LX) indicates direction of rotation and shaft position. The letter (L) indicates low drive unit. If the letter (L) is not used, the shaft will be in a high drive position.

No letter or W – Clockwise Rotation (Standard Rotation)
- X – Counterclockwise Rotation
- Y – Clockwise Rotation
- Z – Counterclockwise Rotation
- LW – Clockwise Rotation
- LX – Counterclockwise Rotation
- LY – Clockwise Rotation
- LZ – Counterclockwise Rotation

Example:

3 7 65 * HB F RV LX SPEC XXXXX TYPE 3 S/N ZZZ

- LX — Direction of Rotation and Shaft Position
- RV — Type of Faceplate
- F — Port Style
- HB — Pump Head Arrangement
- * — Motor Mounted Unit *
- 65 — Theoretical Displacement
- 7 — Shaft Sealing
- 3 — Port Arrangement

* **The letter (M) is used in this space to indicate the pump is mounted on a base (with or without motor).**

As stated in the explanation of the pump nomenclature, all characters may not appear on every pump nameplate.

NOTE: The preceding description of the figure number is to assist in identifying your Roper eX series pump only. **DO NOT** attempt to derive any ratings or performance from the figure number. **DO NOT** use the explanation of the figure number to construct your own pump. Not all combinations are possible. For assistance in pump selection, it is recommended that you consult Roper Pump Company or an authorized distributor.

2. Occasionally, special pumps or configurations are required which are unique for a particular application. These modifications are clarified by a SPECification number. Identification of any items different than a standard pump can be made by consulting Roper Pump Company or an authorized distributor.
3. The TYPE number is a number used by Roper Pump Company for in-house identification of construction and hydraulics. Always include the type number in any references to the pump.
4. The SERIAL number is a unique number assigned to each pump built by Roper Pump Company.

In any communication concerning this pump, always be sure to include the Figure, Spec, Type, and Serial numbers, so proper identification of the pump can be assured.

2. MAXIMUM PUMP RATINGS

The maximum pressure, speed, and temperature limits for this pump SERIES are shown below.
The maximum rating of a pump with a SPEC number may be different depending on the materials of construction.

Maximum limits for the “standard” version of this pump SERIES:

Pressure
- 125 psi [862 kPa] Maximum Inlet
- 125 psi [862 kPa] Maximum Discharge
- 124 psi [855 kPa] Maximum Differential

Speed
- 900 rpm Maximum

Temperature
- SPS Super Cartridge Seal Pumps: 250°F [121°C]
- Triple Lip Seal with back-up packing Pumps: 250°F [121°C]

3. PREOPERATION CHECKS

Read and understand the instructions and recommendations contained in this manual.

Disconnect the coupling between the driver and pump.

Test the rotation of the driver to make sure it will operate the pump in the desired direction of rotation. Rotation is shown on the pump in relation to the integral relief valve. When an integral relief valve is used, make sure it is positioned and adjusted as discussed in Section 5, **DIRECTION OF ROTATION AND RELIEF VALVES**. After the unit is mounted and the piping is connected, the pump should be checked to be sure it operates freely without binding. After operation is proved satisfactory, both pump and driver should be tightly secured, and the alignment rechecked before operation.

Before starting, make sure all guards are in place and the inlet and discharge valves are opened.

After starting the unit, check to see that the pump is delivering liquid. If not, stop the driver immediately. After the pump is delivering liquid, check the unit for excessive vibration, localized heating, and excessive shaft seal leakage. Check the pressure or vacuum by installing gauges at both the inlet and discharge sides of the pump to make sure the pressure or vacuum conforms to specifications.

4. RECOMMENDED TOOL LIST

NOTE: Tools not furnished with pump.

Tools for all Pumps:

(1) Safety Glasses
(1) Rubber Mallet
(1) 3/4" Combination Wrench
(1) 6" Adjustable Wrench
(1) 6" to 10" Three Square File
(1) Pliers

Additional Tools for HB Pumps:

(1) 1/8" Hex Key
(1) Flat Tip Screwdriver, 1/4" wide x 4" long blade

Additional Tools for Pumps with an RV Type Relief Valve:

(1) 1-3/8" Combination Wrench
(1) 1-5/8" Combination Wrench

Additional Tools for Pumps with Flanges:

(1) 15/16" Combination Wrench

Additional Tools for Pumps with Shaft Packing:

Packing Hook for .41" square packing rings

Additional Tools for BH Pumps:

(1) 5/16" Hex Key

5. DIRECTION OF ROTATION AND RELIEF VALVES

There are two types of integral relief valves available. The standard RV is designated by the letters “RV” in the pump nomenclature. The letters “BV” are used for a bi-directional relief valve faceplate.

PROPER PUMP GEAR ROTATION

Proper gear rotation is shown on the warning tags attached to the relief valve faceplate.

PUMP INLET and PUMP DISCHARGE

On the gear rotation tags, either the “pump inlet” or “pump discharge” arrow will always point directly to one side port on the cases that have one side port and one top port. The top port is connected to the side of the pump that is opposite the side port. The “pump inlet” and “pump discharge” arrows will always point directly to the inlet and discharge ports on the pump with straight through port cases.

An integral relief valve should not be used on applications where the discharge must be closed for more than one minute. Prolonged operation of the pump with the discharge closed will cause rapid heating of the liquid circulating through the relief valve, resulting in possible damage.

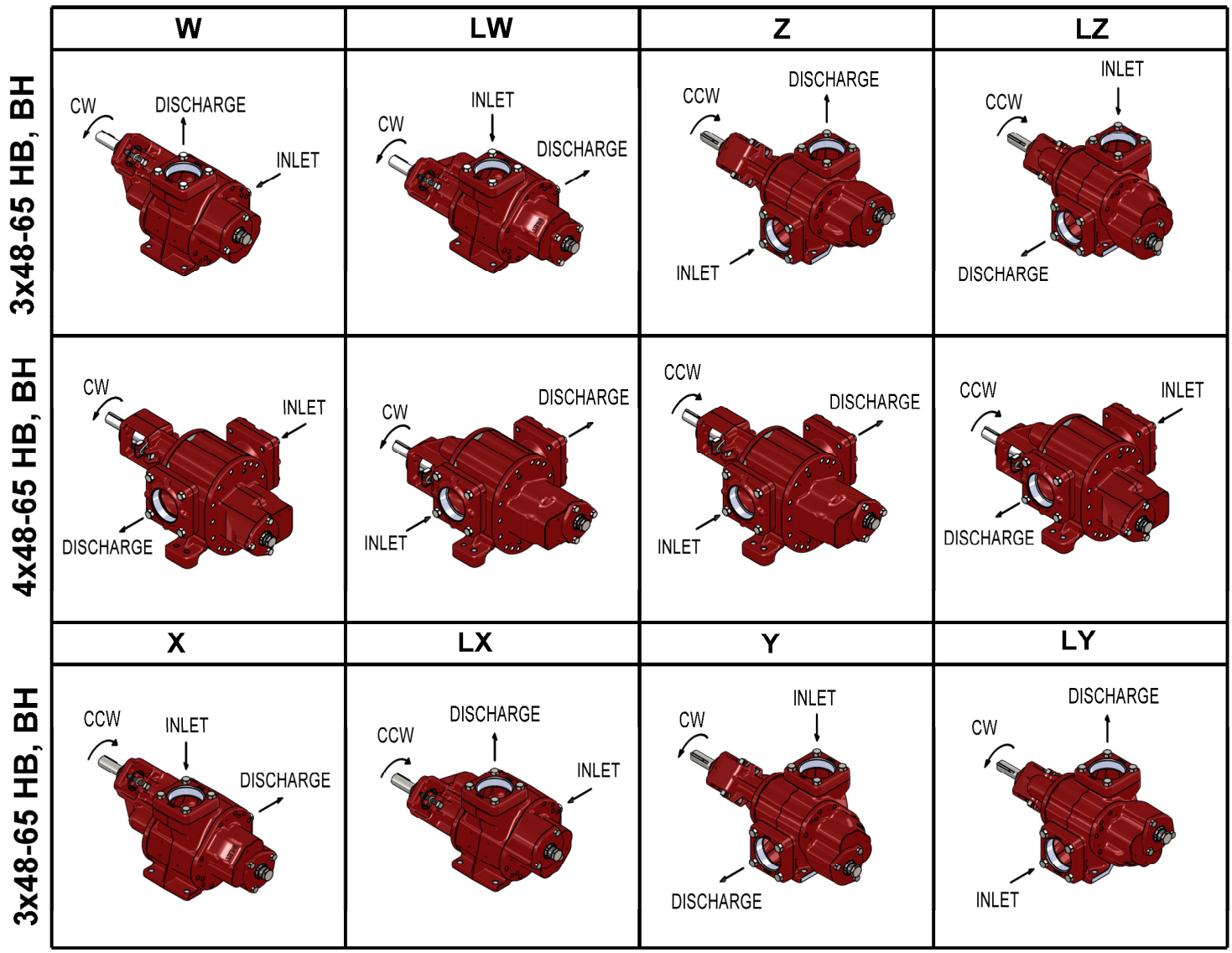

DIRECTION OF ROTATION FOR RV STYLE RELIEF VALVE
FIGURE 5.1

NOTE: The fact that the pump has the correct rotation and pumps liquid in the correct direction does not ensure that the relief valve is installed in the correct position, or that it has the correct setting for the application.

STANDARD RV STYLE RELIEF VALVE

This relief valve is externally adjustable by means of an adjusting screw located in the center of the relief valve cap. The range of adjustment is approximately 30 psi [207 kPa] to 125 psi [862kPa]. The actual capability is dependent on pump speed and liquid viscosity. The settings are for full bypass (all fluid is circulating back to the inlet through the relief valve). The end user must set the relief valve for conditions that exactly match their application.

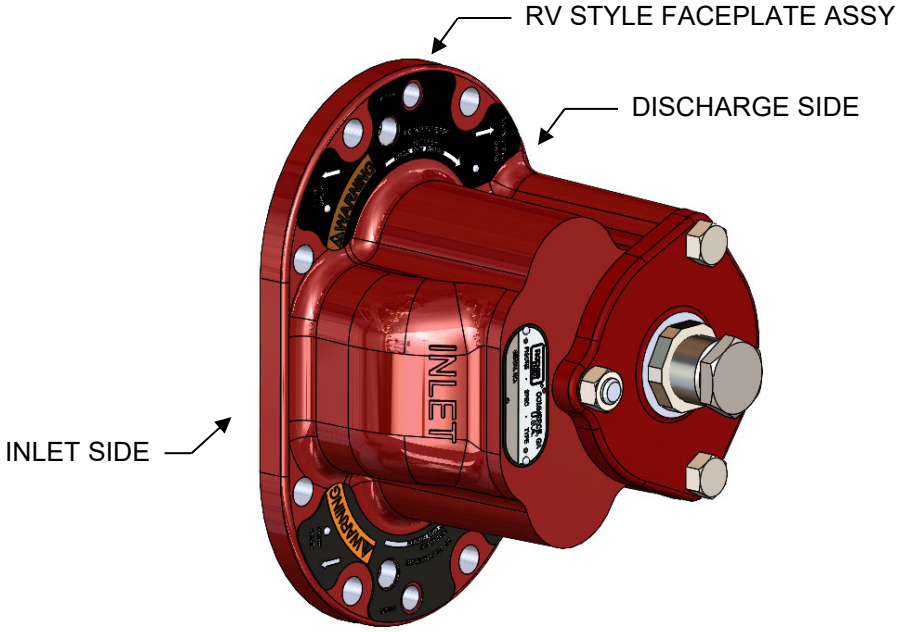

RV STYLE RELIEF VALVE
FIGURE 5.2

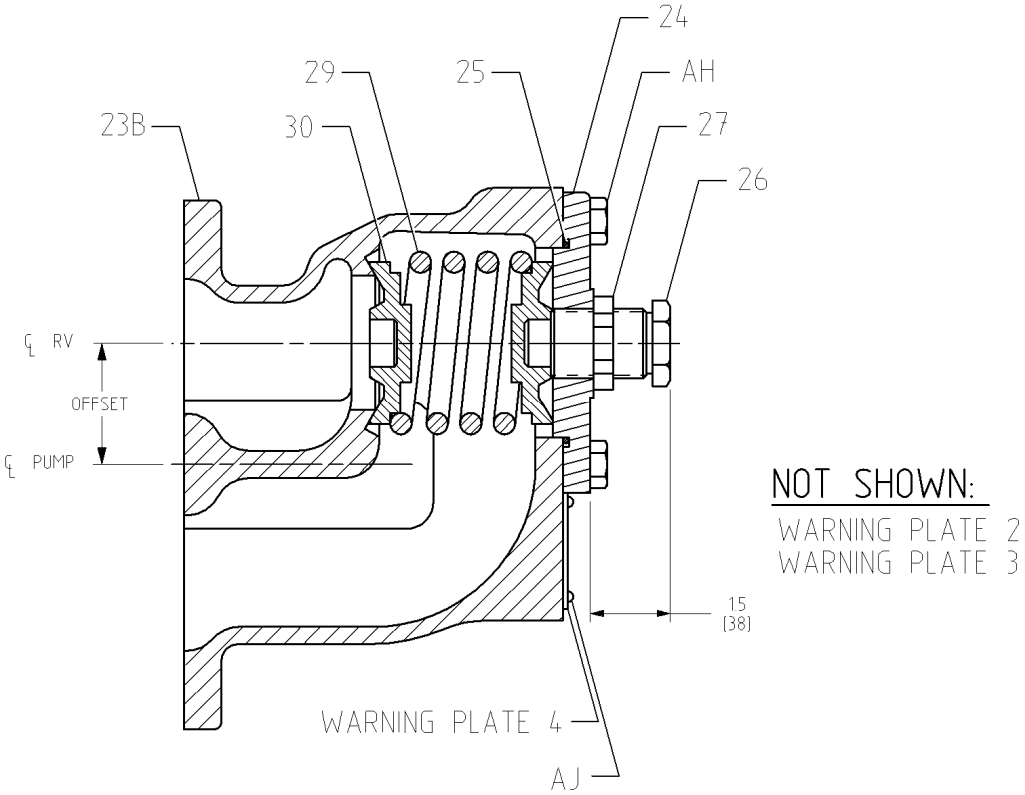

RV STYLE RELIEF VALVE
FIGURE 5.3

DIRECTION OF ROTATION FOR THE RV STYLE RELIEF VALVE

To determine the correct relief valve position for any pump rotation, use Figure 5.1, **DIRECTION OF ROTATION FOR PUMP CONFIGURATIONS USING THE RV STYLE RELIEF VALVE**. The letter “L” in the designation is for low drive applications (the drive shaft is lower than the side port). All other drawings shown are for high drive applications (the drive shaft is above the side port).

The arrow in the drawing at the end of the drive shaft indicates the direction of rotation needed to achieve proper operation of the pump and relief valve when using the pump and relief valve orientation shown in the drawing.

CW indicates clockwise rotation and CCW indicates counterclockwise rotation when viewed from the drive shaft end of the pump.

1. Find the group of drawings with the proper drive shaft position (high or low drive). Drawings with W, Z, X, or Y rotation are high drive pumps. Drawings with LW, LZ, LX, or LY rotation are low drive pumps. Eliminate all other drawings.
2. In the drawings remaining, find the group of drawings with the proper direction of rotation arrow at the end of the drive shaft. Eliminate all other drawings. CW indicates clockwise rotation and CCW indicates counterclockwise rotation when viewed from the drive shaft end of the pump.
3. In the drawings remaining, find the group of drawings with the proper port positions (straight through or right angle). Eliminate all other drawings.
4. In the remaining drawings, find the drawing with the proper inlet and discharge port locations. This drawing will show the proper relief valve position for the pump configuration chosen. Note the position of the words “PUMP INLET” printed on the end of the rotation plates fastened on the relief valve faceplate. The words “PUMP INLET” must be on the inlet “side” of the pump in order for the relief valve to work opposite each other; the top port of the right angle pump is connected to the “side of the pump via an internal passage.”

NOTE: Some older RV style faceplates **DO NOT** have the rotation plates fastened to the faceplate; however, the position of the relief valve is the same, i.e., relief valve cap and adjusting screw are offset to the discharge side of the pump.

DIRECTION OF ROTATION TAG FOR RV STYLE RELIEF VALVES
FIGURE 5.4

CHANGING RV STYLE RELIEF VALVE POSITION

Refer to the sectional drawing (Figure 5.3).

Check drawings in (Figure 5.1) to find the correct way to position the relief valve, based on the pump's direction of shaft rotation and position and the location of the inlet and discharge ports. If you have not checked, do it now to decide if you should change the position of your relief valve.

If the relief valve position needs to be changed, follow the instructions below and refer to Section 14, **PUMP EXPLODED VIEWS** (Figure 14.1 and 14.2) and the **RV STYLE RELIEF VALVE** (Figure 5.3).

1. Turn off pump and lock out the energy source to driver.
2. Close inlet and discharge valves.
3. To drain pump, follow the procedure in Section 7, **INSTRUCTIONS FOR DRAINING PUMP**.
4. Remove eight hex head cap screws (L) securing faceplate (23B) to case. Remove faceplate. On the 65 size pump, there is a case extender (37) between the faceplate and the case.
5. While viewing faceplate (23B) from end with relief valve cap (24), turn faceplate so that orientation of relief valve cap to pump matches **DIRECTION OF ROTATION** drawing previously selected from charts.
6. Install two dowel pins (J) on faceplate end of case (19A, B) if they were removed during disassembly. Place appropriate number of case gaskets (20) on end of case. On the 65 size pump, there is a case extender (37) between the faceplate and the case with two more dowel pins. Align faceplate (23B) on dowel pins maintaining proper orientation as determined above. Secure faceplate to case using eight hex head cap screws (L).

DISASSEMBLY OF RV STYLE RELIEF VALVE

Refer to Section 14, **PUMP EXPLODED VIEWS** (Figure 14.1 and 14.2) and the **RV STYLE RELIEF VALVE** (Figure 5.3) for correct pump configuration.

1. Turn off pump and lock out energy source to driver.
2. Close inlet and discharge valves.
3. To drain pump, follow the procedure in Section 7, **INSTRUCTIONS FOR DRAINING PUMP**.
4. Decrease pressure on spring (29) by loosening lock and seal nut (27) and unscrewing adjusting screw (26) until adjusting screw turns freely.
5. After decreasing pressure on spring (29), remove the relief valve cap (24) by unscrewing two hex head screws (AH) and one hex nut (AK) from faceplate (23B). Remove o-ring (25).
6. Remove poppet/spring guide (30), spring (29), and the other poppet/spring guide (30).
7. Inspect all parts and replace worn or damaged parts as required.

ASSEMBLY OF RV STYLE RELIEF VALVE

Refer to Section 14, **PUMP EXPLODED VIEWS** (Figure 14.1 and 14.2) and the **RV STYLE RELIEF VALVE** (Figure 5.3) for correct pump configuration.

1. Install poppet/spring guide (30) into faceplate (23B) making sure that angled side is against the relief valve seat.
2. Install spring (29) into faceplate (23B) making sure that spring is centered on poppet/spring guide (30).
3. Place pilot of poppet/spring guide (30) into I.D. of spring (29).
4. Screw adjusting screw (26) with lock and seal nut (27) assembled into hole in relief valve cap (24).
5. Replace O-ring (25) on relief valve cap (24).
6. Place small end of adjusting screw (26) in hole in spring guide (30) and secure relief valve cap (24) to faceplate (23B) using two hex head cap screws (AH) and one hex nut (AK).
7. Adjust relief valve by following steps in next section on how to **ADJUST THE RV STYLE RELIEF VALVE.**

TO ADJUST THE RV STYLE RELIEF VALVE

Refer to the sectional drawing, Figure 5.3, **RV STYLE RELIEF VALVE**.

- **WARNING!** Take necessary precautions to prevent personal injury or physical damage that could be caused by any loss of the product being pumped while adjusting the relief valve. **DO NOT** adjust the relief valve without coupling guards in place.

The relief valve must be adjusted under conditions identical to the operating conditions (viscosity, rpm, etc.).

1. Connect a pressure gauge near pump in discharge line between pump and point where discharge line will be closed.
2. Loosen locknut (27) on the adjusting screw (26).
3. Back adjusting screw (26), out to point where end of adjusting screw will be 1-1/2 inches [38 mm] from relief valve cap (24). See **RV STYLE RELIEF VALVE** (Figure 5.3).
4. **WARNING! DO NOT** start the pump until all rotating shafts and couplings are properly guarded. After all rotating shafts and couplings are properly guarded, start the pump and close the discharge line slowly. **DO NOT** exceed the pressure rating of pump or other equipment between the pump and the discharge line valve. If this pressure is reached while closing the discharge valve, **DO NOT** close any further. **DO NOT** run the pump with a closed discharge line for more than one minute at a time because it will result in rapid overheating.
5. With discharge valve closed, turn adjusting screw clockwise in 1/2 turn increments until pressure gauge shows desired pressure setting.
6. Tighten locknut (27).
7. Open discharge line and turn off pump.

STANDARD BV STYLE RELIEF VALVE

This relief valve utilizes two standard RVs in tandem so that one side is operational regardless of the pump rotation. It is externally adjustable by means of an adjusting screw located in the center of each relief valve cap. The range of adjustment is approximately 30 psi [207 kPa] to 125 psi [862kPa]. The actual capability is dependent on pump speed and liquid viscosity. The settings are for full bypass (all fluid is circulating back to the inlet through the relief valve). The end user must set the relief valve for conditions that exactly match their application.

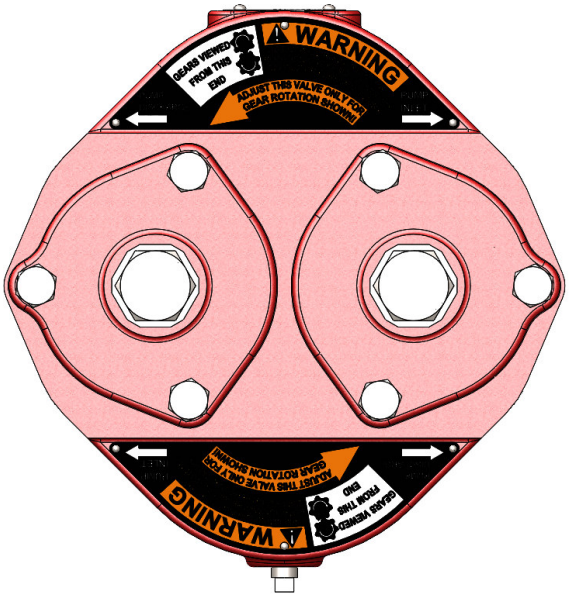

BV STYLE BI-DIRECTIONAL RELIEF VALVE FACEPLATE
FIGURE 5.5

NOT SHOWN:

WARN5

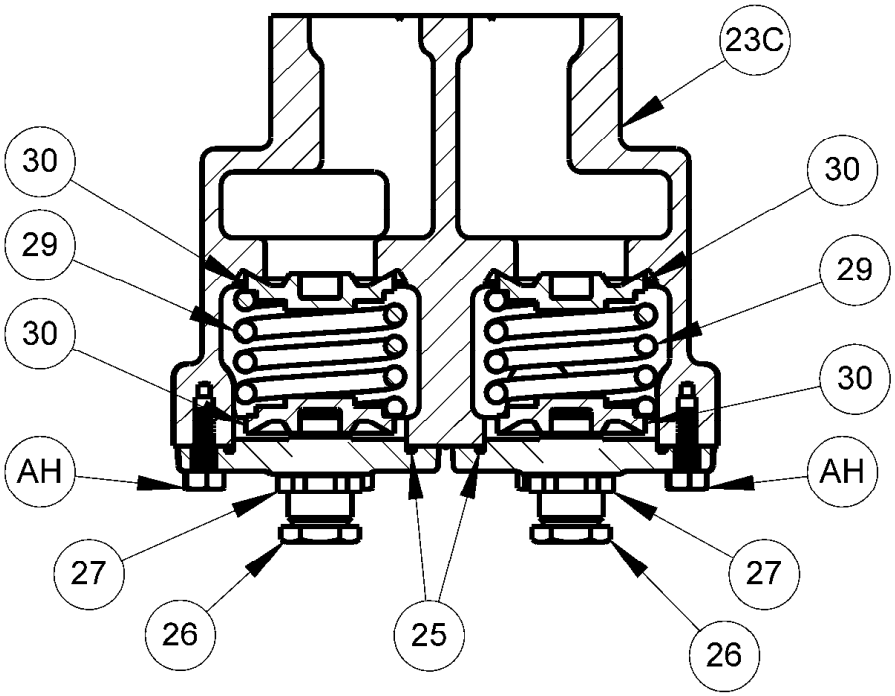

BV STYLE
RELIEF VALVE
FIGURE 5.6

DIRECTION OF ROTATION FOR THE BV STYLE RELIEF VALVE

Even though the BV Style Relief Valve was designed to be operational regardless of the pump rotation, only one side is operational at a time. To determine the correct relief valve position for any pump rotation, use Figure 5.1, **DIRECTION OF ROTATION FOR PUMP CONFIGURATIONS USING THE RV STYLE RELIEF VALVE**. The letter “L” in the designation is for low drive applications (the drive shaft is lower than the side port). All other drawings shown are for high drive applications (the drive shaft is above the side port).

The arrow in the drawing at the end of the drive shaft indicates the direction of rotation needed to achieve proper operation of the pump and relief valve when using the pump and relief valve orientation shown in the drawing.

CW indicates clockwise rotation and CCW indicates counterclockwise rotation when viewed from the drive shaft end of the pump.

1. Find the group of drawings with the proper drive shaft position (high or low drive). Drawings with W, Z, X, or Y rotation are high drive pumps. Drawings with LW, LZ, LX, or LY rotation are low drive pumps. Eliminate all other drawings.
2. In the drawings remaining, find the group of drawings with the proper direction of rotation arrow at the end of the drive shaft. Eliminate all other drawings. CW indicates clockwise rotation and CCW indicates counterclockwise rotation when viewed from the drive shaft end of the pump.
3. In the drawings remaining, find the group of drawings with the proper port positions (straight through or right angle). Eliminate all other drawings.
4. In the remaining drawings, find the drawing with the proper inlet and discharge port locations. This drawing will show the proper relief valve position for the pump configuration chosen. Note the position of the words “PUMP INLET” printed on the end of the rotation plates fastened on the relief valve faceplate. The words “PUMP INLET” must be on the inlet “side” of the pump in order for the relief valve to work opposite each other; the top port of the right angle pump is connected to the “side of the pump via an internal passage.”

DIRECTION OF ROTATION TAG FOR BV STYLE BI-DIRECTION RELIEF VALVES
FIGURE 5.7

Only one side of the BV style relief valve is active at a time. Refer to Figure 5.1, DIRECTION OF ROTATION FOR PUMP CONFIGURATIONS USING THE RV STYLE RELIEF VALVE for proper rotation and which side of the relief valve is active.

DISASSEMBLY OF BV STYLE RELIEF VALVE

Refer to Section 14, **PUMP EXPLODED VIEWS** (Figure 14.1 and 14.2) and the **BV STYLE RELIEF VALVE** (Figure 5.6) for correct pump configuration.

1. Turn off pump and lock out energy source to driver.
2. Close inlet and discharge valves.
3. To drain pump, follow the procedure in Section 7, **INSTRUCTIONS FOR DRAINING PUMP**.
4. Decrease pressure on one of the springs (29) by loosening lock and seal nut (27) and unscrewing adjusting screw (26) until adjusting screw turns freely.
5. After decreasing pressure on spring (29), remove the relief valve cap (24) by unscrewing two hex head screws (AH) and one hex nut (AK) from faceplate (23C). Remove o-ring (25).
6. Remove poppet/spring guide (30), spring (29), and the other poppet/spring guide (30).
7. Repeat steps 4 thru 6 for the other side.
8. Inspect all parts and replace worn or damaged parts as required.

ASSEMBLY OF BV STYLE RELIEF VALVE

Refer to Section 14, **PUMP EXPLODED VIEWS** (Figure 14.1 and 14.2) and the **BV STYLE RELIEF VALVE** (Figure 5.6) for correct pump configuration.

1. Install poppet/spring guide (30) into faceplate (23C) making sure that angled side is against the relief valve seat.
2. Install spring (29) into faceplate (23C) making sure that spring is centered on poppet/spring guide (30).
3. Place pilot of poppet/spring guide (30) into I.D. of spring (29).
4. Screw adjusting screw (26) with lock and seal nut (27) assembled into hole in relief valve cap (24).
5. Replace O-ring (25) on relief valve cap (24).
6. Place small end of adjusting screw (26) in hole in spring guide (30) and secure relief valve cap (24) to faceplate (23C) using two hex head cap screws (AH) and one hex nut (AK).
7. Repeat steps 1 thru 6 for the other side.
8. Adjust relief valve by following steps in next section on how to **ADJUST THE BV STYLE RELIEF VALVE.**

TO ADJUST THE BV STYLE RELIEF VALVE

Refer to the sectional drawing, Figure 5.6, **BV STYLE RELIEF VALVE**.

- **WARNING!** Take necessary precautions to prevent personal injury or physical damage that could be caused by any loss of the product being pumped while adjusting the relief valve. **DO NOT** adjust the relief valve without coupling guards in place.

The relief valve must be adjusted under conditions identical to the operating conditions (viscosity, rpm, etc.). Make sure you are adjusting the appropriate side of the BV relief valve that will be used for your rotation. Refer to Figure 5.1, **DIRECTION OF ROTATION FOR PUMP CONFIGURATIONS USING THE RV STYLE RELIEF VALVE** for proper rotation and which side of the relief valve is active.

1. Connect a pressure gauge near pump in discharge line between pump and point where discharge line will be closed.
2. Loosen locknut (27) on the adjusting screw (26).

3. Back adjusting screw (26), out to point where end of adjusting screw will be 1-1/2 inches [38 mm] from relief valve cap (24). See **BV STYLE RELIEF VALVE** (Figure 5.6).

   WARNING! DO NOT start the pump until all rotating shafts and couplings are properly guarded. After all rotating shafts and couplings are properly guarded, start the pump and close the discharge line slowly. **DO NOT** exceed the pressure rating of pump or other equipment between the pump and the discharge line valve. If this pressure is reached while closing the discharge valve, **DO NOT** close any further. **DO NOT** run the pump with a closed discharge line for more than one minute at a time because it will result in rapid overheating.

4. With discharge valve closed, turn adjusting screw clockwise in 1/2 turn increments until pressure gauge shows desired pressure setting.

5. Tighten locknut (27).

6. Open discharge line and turn off pump.

6. HIGH DRIVE TO LOW DRIVE

Prior to operating pump, make sure that the shaft rotation, pipe connections, and the relief valve position are in accordance with the appropriate illustrations (Figure 5.1). To change the rotation and/or piping orientation, it may be necessary to remove the piping from the pump or the pump from the mounting. [Flanges (21) and flange gaskets (22), when provided, can be removed from pump.]

Whenever changing rotation, inspect all parts before reassembly. Replace all worn parts and install new gaskets in appropriate numbers as removed.

1. Remove coupling or universal joint and drive key (A) from drive shaft (32). Remove all burrs and sharp edges from drive shaft and keyway.
2. A.) To reverse pump rotation and keep piping arrangement the same, drive shaft (32) position must be changed. Follow steps 3 - 9.

   B.) To reverse pump rotation and leave drive shaft (32) and case (19A, B) in same position; liquid flow through pump will be reversed. Follow steps 10 - 11.

   C.) To change port to opposite side on pumps with right angle port arrangement and maintain same pump rotation, follow steps 12 - 18.

   D.) To change port to opposite side, maintain same pump rotation and drive shaft (32) in same position; liquid flow through pump will be reversed. Follow steps 19 - 24.

REVERSE ROTATION, SAME PIPING ARRANGEMENT

3. To reverse pump rotation and keep piping arrangement the same, it is necessary to change from high drive to low drive or low drive to high drive. On pumps with right angle ports, the rotations are: W to LX, X to LW, Z to LY, Y to LZ. On pumps with thru ports, the rotations are: W to LZ, Z to LW or vice versa.
4. Remove eight hex head cap screws (L) securing backplate (6) to case (19A, B) and separate backplate assembly from case assembly. On “BH” pumps, drive gear (34) will pull out with backplate assembly. On “HB” pumps, drive gear (34) may remain in case assembly.
5. Switch drive gear (34) and idler gear/shaft (35 and 33) position in case (19A, B).
6. Position appropriate number of case gaskets (20) on case (19A, B) (oil or grease may be used to hold gaskets in place.)
7. Rotate backplate (6) assembly 180°.
8. Slide drive shaft (32) and gear key (B) into shaft hole of drive gear (34).
9. Slide backplate (6) assembly into position and secure.

REVERSE ROTATION, SAME DRIVE SHAFT AND CASE ARRANGEMENT

10. To reverse flow of liquid through pump ports, reverse rotation of drive shaft (32), maintain the original positions of the drive shaft and case (19A, B). Pumps with right angle ports: W to X, LW to LX, Z to Y, LX to LY; and pumps with straight thru ports: W to Z, LW to LZ) or vice versa.
11. If plain faceplate (23A) or BV Style relief valve (23C) is used, remount to case (19A, B) in same position. If a RV Style relief valve faceplate (23B) is used, rotate faceplate 180° and remount to case (19A, B).

CHANGE PORT AND DRIVE SHAFT LOCATION, SAME ROTATION

12. To change the port to the opposite side and maintain same pump rotation, change drive shaft (32) from high drive to low drive (pumps with right angle ports: W to LY, Y to LW, Z to LX, X to LZ) or vice versa.
13. Remove eight hex head cap screws (L) securing backplate (6) to case (19A, B) and separate backplate assembly from case assembly. On “BH” pumps, drive gear (34) will pull out with backplate assembly. On “HB” pumps, drive gear (34) may remain in case assembly.
14. Remove the faceplate (23A, B, C).
15. Rotate case (19A, B) 180°, (front to back).
16. Switch drive gear (34) and idler gear/shaft (35 and 33) positions in case (19A, B).
17. If plain faceplate (23A) or BV Style relief valve (23C) is used, remount to case (19A, B) in same position. If a RV Style relief valve faceplate (23B) is used, rotate faceplate 180° and remount to case (19A, B).
18. on case (19A, B).

SAME ROTATION, CHANGE PORT LOCATION, SAME DRIVE SHAFT LOCATION

19. To change port to opposite side, maintain same pump rotation and drive shaft (32) in same position; the flow of liquid through the pump will be reversed. (pumps with right angle ports: W to Y, LW to LY, Z to X, LZ to LX) or vice versa.
20. Remove eight hex head cap screws (L) securing backplate (6) to case (19A, B) and separate backplate assembly from case assembly. On “BH” pumps, drive gear (34) will pull out with backplate assembly. On “HB” pumps, drive gear (34) may remain in case assembly.
21. Remove faceplate (23A, B, C).
22. Rotate case (19A, B) 180°, (front to back).
23. Remount and secure case (19A, B) to faceplate (23A, B, C).
24. Remount backplate (6) assembly to case (19A, B).

7. INSTRUCTIONS FOR DRAINING PUMP

Refer to Refer to Section 14, **PUMP EXPLODED VIEWS.**

The extent to which a pump can be drained is dependent upon the product being pumped. Low viscosity products such as solvents will drain quickly and easily. High viscosity products such as molasses and tar will drain very slowly. Also, the draining of high viscosity products will be less complete.

Regardless of the product pumped, the areas at the blind end of the bearing bores and the mechanical seal chamber will not drain.

FOR PUMPS EQUIPPED WITH DRAIN PLUGS

1. Read and understand all safety instructions and warnings before starting draining procedure.
2. There are two pipe plugs (S) in the faceplate (23A, B, C). Remove one plug that is in lowest position.
3. Rotate drive shaft very slowly by hand. Each time that flow from drain increases, stop turning shaft until flow stops; then resume until flow increases again. Be sure to rotate shaft several complete revolutions in each direction until all flow from drain has stopped.
4. Reinstall and tighten pipe plug (S).

FOR PUMPS NOT EQUIPPED WITH DRAIN PLUGS

1. Read and understand all safety instructions and warnings before starting procedures.
2. Loosen eight hex head cap screws (L) securing faceplate (23A, B, C) to allow a gap of 1/8 of an inch [3 mm] between faceplate and case (19A, B) for draining. On the 65 size pumps, there is a case extender (37) between the faceplate and the case.
3. Rotate drive shaft (32) very slowly by hand. Each time that flow from drain increases; stop turning shaft until flow stops; then resume until flow increases again. Be sure to rotate shaft several complete revolutions in each direction until all flow from drain has stopped.
4. After draining has been completed, examine case gaskets (20) making sure gasket is not torn prior to tightening the eight hex head cap screws (L). If gasket is torn or further disassembly is required, follow steps in Section 8, **INSTRUCTIONS FOR PUMP DISASSEMBLY** to replace gaskets.

8. INSTRUCTIONS FOR PUMP DISASSEMBLY

Refer to Section 14, **PUMP EXPLODED VIEWS.**

1. Read and understand all safety instructions and warnings before starting to disassemble pump. While disassembling pump, always inspect parts and adjacent parts to see if further disassembly is needed. Replace worn or damaged parts as required.
2. If you do not know which pump arrangement you have, collect nameplate data and refer to Section 1**, NAMEPLATE DATA**. Consult Roper Pump Company or an authorized distributor if there are any questions.
3. When cleaning or lubricating, use only cleaning solutions and lubricants that are compatible with products being pumped and with sealing elastomers.
4. Turn off pump and lock out energy source to driver. **DO NOT** proceed further with disassembly of pump it there is the slightest possibility that driver may be started.
5. Close inlet and discharge valves.
6. Remove guard and disconnect coupling between driver and pump.
7. Drain inlet and discharge lines. Disconnect lines from pump inlet and discharge.
8. Follow the procedure in Section 7, **INSTRUCTIONS FOR DRAINING PUMP**.
9. A.) For “HB” pumps, follow steps 11 - 20.

   B.) For “BH” pumps, see Section 12, **INSTRUCTIONS FOR DISASSEMBLY OF A TYPE “BH” HYDRAULIC DRIVE**. After disassembling hydraulic drive, return to this section and follow steps 11 - 20.
10. Remove eight hex head cap screws (L) securing faceplate (23A, B, C) to case (19A, B). Remove faceplate (23A. B. C). On the 65 size pump, there is a case extender (37) between the faceplate and the case, along with one more case gasket (20) and two additional dowel pins (J).
11. Remove two dowel pins (J) from case.
12. Remove case gaskets (20).
13. A.) On “BH” pumps, remove faceplate end retaining ring (36) from drive shaft (32). Remove drive gear (34) and key (B).

    B.) On “HB” pumps, remove drive gear (34) and key (B) from drive shaft (32).
14. Remove idler gear (35) and key (B) from idler shaft (33). Remove idler shaft.
15. Remove eight hex head cap screws (L) securing backplate (6) to case (19A, B) and separate parts.
16. Remove case gaskets (20) from opposite side of case (19A, B).
17. Remove two dowel pins (J) from opposite side of case (19A, B).
18. Remove drive key (A) from drive shaft (32).
19. On BH pumps, remove backplate end retaining ring (36) from driveshaft (32).
20. A.) For 3200/4200 “BH” pumps, follow steps 21 - 24.

    B.) For 3200/4200 “HB” pumps, follow steps 25 - 30.

    C.) For 3700/4700 “BH” pumps, follow steps 31 - 34.

    D.) For 3700/4700 “HB” pumps, follow steps 35 - 40.

3200/4200 “BH” Pumps (See Figure 14.1)

21. Remove two locknuts (F) from square head bolts (G) securing packing gland (14) in place. Remove packing gland clip (13), packing gland (14), spring clip (15), and two square head bolts (G).
22. Remove packing rings (16). Packing hooks are commercially available to assist in removal of packing rings. Remove triple lip seal (10).
23. Remove drive shaft (32). Clean drive shaft and adjacent parts. Examine drive shaft and replace if excessively worn or scored.
24. Visually inspect all parts. Replace all worn or damaged parts before reassembling pump. It is recommended that new gaskets (20, 22, 25 if applicable) be installed each time pump is disassembled and reassembled.

3200/4200 “HB” Pumps (See Figure 14.2)

25. Remove retaining ring (3) from backplate (6).
26. Loosen setscrews in ball bearing (2). Remove ball bearing.
27. Remove two locknuts (F) from square head bolts (G) securing packing gland (14) in place. Remove packing gland clip (13), packing gland (14), spring clip (15), and two square head bolts (G).
28. Remove packing rings (16). Packing hooks are commercially available to assist in removal of packing. Remove triple lip seal (10).
29. Remove drive shaft (32). Clean drive shaft and adjacent parts. Examine drive shaft and replace if excessively worn or scored.
30. Visually inspect all parts. Replace all worn or damaged parts before reassembling pump. It is recommended that new gaskets (20, 22, 25 if applicable) be installed each time pump is disassembled and reassembled.

3700/4700 “BH” Pumps (See Figure 14.1)

31. Remove two locknuts (F) and two flat washers (N) from square head bolts (G) securing cartridge seal to backplate (6).
32. Remove drive shaft (32) along with cartridge seal (11) from backplate (6).
33. When removing cartridge seal, clean and lubricate drive shaft (32) to make sure it is smooth and free from all burrs. Loosen setscrews (if present) on cartridge seal (11) and remove. Inspect sealing surfaces and rotating elements. Replace as required.
34. Visually inspect all parts. Replace all worn or damaged parts before reassembling pump. It is recommended that new gaskets (20, 22, 25 if applicable) be installed each time the pump is disassembled and reassembled.

3700/4700 “HB” Pumps (See Figure 14.2)

35. Remove retaining ring (3) from backplate (6).
36. Loosen setscrews in ball bearing (2). Remove ball bearing.
37. Remove two locknuts (F) and two flat washers (N) from square head bolts (G) securing seal to backplate (6).
38. Remove drive shaft (32) along with cartridge seal (11) from backplate (6).
39. When removing cartridge seal, clean and lubricate drive shaft (32) to make sure it is smooth and free from all burrs. Loosen setscrews (if present) on cartridge seal (11) and remove. Inspect sealing surfaces and rotating elements. Replace as required.
40. Visually inspect all parts. Replace all worn or damaged parts before reassembling pump. It is recommended that new gaskets (20, 22, 25 if applicable) be installed each time the pump is disassembled and reassembled.

9. BEARING INSTALLATION

BEARING INSTALLATION (converting from other bearing materials)

1. Remove all burrs and raised edges from bearing bores.

2. Ensure an expansion washer (57) has been installed in the bottom of the bearing bore.

3. Place faceplate or backplate on a press base with milled face upward. Support endplate so that milled face is perpendicular (square) with press ram.

4. Position endplate so that one bearing bore is located directly under press ram.

5. Lubricate endplate bores with a light oil that is compatible with product to be pumped.

6. Place end of new bearing at entrance of bore in endplate, taking care to align grooves in bearing with the grooves in face of endplate.

7. Press bearing into endplate bore. *It is important to press them in with one slow uninterrupted stroke to prevent cracking*. It is best to use a stepped arbor with a few thousandths of an inch clearance between arbor and bore of bearing. Be sure to press bearings in until they are flush to .005 of an inch [.127 mm] below milled face of endplate.

8. Repeat procedure for second bearing.

10. DIMENSIONAL DATA FOR INTERNAL PARTS

Nominal dimensions are given below. With the exception of gasket thickness and lateral clearance, your actual measurements should not vary from these numbers by no more than .002". Use properly calibrated measuring equipment when measuring parts.

ITEM	PUMP SIZE	
	48	65
ENDPLATE BORES FOR BRGS	1.751	
SHAFT OD	1.4365	
CASE BORE	5.011	
GEAR OD	4.999	
GEAR OD TO CASE BORE CLEARANCE	0.012	
WC BRG OD	1.7515	
WC BRG PRESS FIT	0	
WC BRG FREE ID	1.446	
WC BRG INSTALLED ID	1.446	
WC BRG TO SHAFT DIA. CLEARANCE	0.0095	
CASE WIDTH	7.501	
CASE EXTENSION WIDTH	0	2.500
GASKET THICKNESS (ONE)	0.006	
GASKET THICKNESS (3 COMPRESSED)	0.013	
GEAR FACE WIDTH	7.499	9.999
LATERAL CLEARANCE (3 COMP GASKETS)	0.015	

11. INSTRUCTIONS FOR PUMP ASSEMBLY

Refer to Section 14, **PUMP EXPLODED VIEWS.**

Refer to Section 5, **DIRECTION OF ROTATION AND RELIEF VALVES**, to assure proper configuration for pump rotation, port location, and relief valve position prior to assembling pump.

1. Read and understand all safety instructions and warnings before assembling pump. Visually inspect all parts during assembly. Replace all worn or damaged parts. Although they may appear reusable, it is recommended that new gaskets (20, 22) be installed when pump is being reassembled.
   - **WARNING!** Only use genuine Roper gaskets. Gasket thickness determines proper clearances. Always check quantity of gaskets removed and replace with exact quantity. Proper material must be used based on application.
2. When cleaning or lubricating, only use products that are compatible with product being pumped and elastomers within pump.
3. Cartridge seals are precision pieces of equipment. Use extreme care not to damage seal faces or elastomers during assembly.
4. Install two dowel pins (J) on each side of case (19A, B). Place appropriate number of case gaskets (20) on faceplate side of case. For the 65 size only: align the case extender (37) on the dowel pins (J), install two additional dowel pins in the case extender, and an additional case gasket. Align faceplate (23A, B, C) on dowel pins (J). Secure faceplate to case using eight hex head cap screws (L).
5. Place idler gear (35) into case bore. Install key (B) in keyway on idler shaft (33). Slide idler shaft into I. D. of idler gear.
6. A.) For 3200/4200 “BH” pumps using triple lip seal and back-up packing, follow steps 7 - 15.

   B.) For 3200/4200 “HB” pumps using triple lip seal and back-up packing, follow steps 16 - 24.

   C.) For 3700/4700 “BH” pumps using a SPS cartridge seal, follow steps 25 - 31.

   D.) For 3700/4700 “HB” pumps using a SPS cartridge seal, follow steps 32 - 38.

3200/4200 “BH” PUMPS (Triple Lip Seal and back-up Packing) (See Figure 14.1)

7. Install backplate end retaining ring (36) on drive shaft (32). Install key (B) on drive shaft. Slide drive gear (34) onto drive shaft. Install faceplate end retaining ring (36) on drive shaft to secure drive gear.
8. Place appropriate number of case gaskets (20) on backplate side of case (19A, B). Slide drive gear (34) assembled with drive shaft (32), and backplate (6) into case bore. Align backplate (6) on dowel pins (J). Secure backplate (6) to case (19A, B) using eight hex head cap screws (L).
9. Carefully remove all burrs and sharp edges from area of drive shaft over which the triple lip seal (10) will slide. The triple lip seal (10) has a small amount of grease between the lips as provided by the manufacturer. DO NOT remove this grease; it is necessary for lubrication during start-up. Install triple lip seal (10) over drive shaft (32) and into packing bore of backplate (6). Refer to details on **Figure 14.1** for proper orientation.
10. Install seven packing rings (16) in backplate bore. DO NOT use a one-piece spiral wrap of packing. Stagger joints on each packing ring 180° apart. Rings MUST NOT be tamped or seated.
11. Check drive shaft (32) for free movement after each ring is installed.
12. Place one square head bolt (G) through each slot in backplate (6) and through each hole in packing gland (14). Insert packing gland (14) into packing box. Slide packing gland clip (13) over square head bolts (G). Using two locknuts (F), secure packing gland (14) in place. ONLY TIGHTEN LOCKNUTS UNTIL ONE THREAD SHOWS ON BOLTS. PACKING GLAND MUST REMAIN LOOSE. The packing rings (16) are only for emergency back-up of the triple lip seal (10) until a new triple lip seal can be installed.
13. Install drive key (A).

14. For 3200/4200 “BH” hydraulic drive assembly, go to Section 13, **INSTRUCTIONS FOR ASSEMBLY OF A TYPE “BH” HYDRAULIC DRIVE.**

15. Read and understand all safety instructions and warnings before installing and operating pump.

3200/4200 “HB” Pumps (Triple Lip Seal and back-up Packing) (See Figure 14.2)

16. Place drive gear (34) into case bore. Install key (B) in keyway of drive shaft (32). Slide drive shaft into bore of drive gear.

17. Place appropriate number of case gaskets (20) on backplate side of case (19A, B). Align backplate (6) on dowel pins (J). Secure backplate to case using eight hex head cap screws (L).

18. Carefully remove all burrs and sharp edges from area of drive shaft over which the triple lip seal (10) will slide. The triple lip seal (10) has a small amount of grease between the lips as provided by the manufacturer. DO NOT remove this grease; it is necessary for lubrication during start-up. Install triple lip seal (10) over drive shaft (32) into packing bore of backplate (6). Refer to details on **Figure 14.2** for proper orientation.

19. Install seven packing rings (16) in backplate bore. DO NOT use a one-piece spiral wrap of packing. Stagger joints on each packing ring 180° apart. Rings MUST NOT be tamped or seated.

20. Check drive shaft (32) for free movement after each ring is installed.

21. Place one square head bolt (G) through each slot in backplate (6) and through each hole in packing gland (14). Insert packing gland (14) into packing box. Slide packing gland clip (13) over square head bolts (G). Using two locknuts (F), secure packing gland (14) in place. ONLY TIGHTEN LOCKNUTS UNTIL ONE THREAD SHOWS ON BOLTS. PACKING GLAND MUST REMAIN LOOSE. The packing rings (16) are only for emergency back-up of the triple lip seal (10) until a new triple lip seal can be installed.

22. Install ball bearing (2) on drive shaft (32) and into backplate (6). **DO NOT** strike the outer race of the bearing or the grease seal just inside the outer race. This could damage the bearing. The bearings are pre-lubricated and **DO NOT** require lubrication at time of initial installation. A small amount of quality bearing grease will be required during regular maintenance. Align setscrews in inner race of ball bearing with wide groove in shaft. Tighten setscrews in ball bearing (2) to secure bearing to drive shaft (32). Install retaining ring (3) into backplate (6) to secure ball bearing (2) to backplate.

23. Install drive key (A).

24. Read and understand all safety instructions and warnings before installing and operating pump.

3700/4700 “BH” Pumps (SPS Cartridge Seal) (See Figure 14.1)

25. Install backplate end retaining ring (36) on drive shaft (32). Install key (B) on drive shaft. Slide drive gear (34) onto drive shaft. Install faceplate end retaining ring (36) on drive shaft to secure drive gear.

26. Place appropriate number of gaskets (20) on backplate side of case (19A, B). Slide drive gear (34) assembled with drive shaft (32), and backplate (6) into case bore. Align backplate (6) on dowel pins (J). Secure backplate (6) to case (19A, B) using eight hex head cap screws (L).

27. Carefully remove all burrs and sharp edges from area of drive shaft over which the SPS cartridge seal (11) will slide.

28. Lubricate drive shaft and seal bore with a compatible lubricant. Install SPS cartridge seal (11) on drive shaft and position seal against backplate (6) using two flat washers (N) and two square head bolts (G). Push on seal collar near drive shaft diameter. DO NOT push against seal gland. Care must be taken not to damage seal during installation. Tighten seal set screws onto drive shaft.

29. Install drive key (A).

30. For 3700/4700 “BH” hydraulic drive assembly, go to Section 13, **Instructions for Assembly of a Type “BH” Hydraulic Drive.**

31. Read and understand all safety instructions and warnings before installing and operating pump.

3700/4700 “HB” Pumps (SPS Cartridge Seal) (See Figure 14.2)

32. Place drive gear (34) into case bore. Install key (B) in keyway of drive shaft (32). Slide drive shaft into bore of drive gear.

33. Place appropriate number of case gaskets (20) on backplate side of case (19A, B). Align backplate (6) on dowel pins (J). Secure backplate to case using eight hex head cap screws (L).

34. Carefully remove all burrs and sharp edges from shaft over which the SPS cartridge seal (11) will slide.

35. Lubricate drive shaft and seal bore with a compatible lubricant. Install SPS cartridge seal (11) on drive shaft and position seal against backplate (6) using two flat washers (N) and two square head bolts (G). Push on seal collar near drive shaft diameter. DO NOT push against seal gland. Care must be taken not to damage seal during installation. Tighten seal set screws onto drive shaft.

36. Install ball bearing (2) on drive shaft (32) and into backplate (6). **DO NOT** strike the outer race of the bearing or the grease seal just inside the outer race. This could damage the bearing. The bearings are pre-lubricated and **DO NOT** require lubrication at time of initial installation. A small amount of quality bearing grease will be required during regular maintenance. Align setscrews in inner race of ball bearing with wide groove in shaft. Tighten setscrews in ball bearing (2) to secure bearing on drive shaft (32). Install retaining ring (3) into backplate (6) to secure ball bearing (2) to backplate (6).

37. Install drive key (A).

38. Read and understand all safety instructions and warnings before installing and operating pump.

12. INSTRUCTIONS FOR DISASSEMBLY OF A TYPE “BH” HYDRAULIC DRIVE

Refer to Section 14, **PUMP EXPLODED VIEWS**, **Figure 14.1**, for disassembly of “BH”. If pump requires disassembly, refer to Section 8, **INSTRUCTIONS FOR PUMP DISASSEMBLY**.

Refer to Section 14, **Figure 14.3**, sectional drawing for **TYPE “BH” HYDRAULIC DRIVE COUPLING ASSEMBLY** for disassembly of bracket and coupling**.**

1. Read and understand safety instructions and warnings before starting to disassemble hydraulic drive components from pump. While disassembling, always inspect disassembled parts and adjacent parts to see if further disassembly is needed. Replace worn or damaged parts as required.
2. Turn off pump and lock out energy source to hydraulic motor. **DO NOT** proceed further with disassembly of the pump if there is the slightest possibility that the hydraulic motor may be started.
3. Close inlet and discharge valves.
4. If pump is to be disassembled:
   A.) Refer to Section 14, **Figure 14.1** pump sectional drawing for “**BHFRV**” and **Figure 14.3** Hydraulic Drive Coupling Assembly
   B.) If used, turn off and disconnect flush for cartridge seal.
   C.) To drain pump, follow the procedures in Section 7, **INSTRUCTIONS FOR DRAINING PUMP**.
   D.) Disconnect lines from pump inlet and discharge.
5. Remove four cap screws securing hydraulic motor to bracket (61).
6. Slide hydraulic motor out of bracket. The rigid coupling (62) is a slip fit on both shafts; therefore, it may remain on pump shaft or motor shaft.
7. Remove four socket head cap screws (64) securing bracket (61) to backplate (6). Remove bracket.
8. For further disassembly of the pump, refer to Section 8, **INSTRUCTIONS FOR PUMP DISASSEMBLY**.

13. INSTRUCTIONS FOR ASSEMBLY OF A TYPE “BH” HYDRAULIC DRIVE

Refer to Section 14, **PUMP EXPLODED VIEWS**, **Figure 14.1**, for assembly of “BH”. If pump requires assembly, refer to Section 11, **INSTRUCTIONS FOR PUMP ASSEMBLY**.

Refer to Section 14, **Figure 14.3**, sectional drawing for **TYPE “BH” HYDRAULIC DRIVE COUPLING ASSEMBLY** for assembly of bracket and coupling.

1. Install retaining ring (63) in rigid coupling (62).
2. Install key (A) in pump shaft keyway. Slide rigid coupling (62) onto shaft until end of the shaft is against retaining ring (63).
3. Place bracket (61) onto pilot of backplate (6). Secure bracket with four socket head cap screws (64).
4. Slide rigid coupling (62) back until outboard end of coupling is even with outboard end of bracket (61).
5. Install key in hydraulic motor shaft. Line up shaft key and rigid coupling keyway and slide units together. Rotate hydraulic motor to align motor mounting holes and secure motor with two or four cap screws as required.
6. Read and understand safety instructions and warnings before installing and operating pump.

14. PUMP EXPLODED VIEWS

2. Ball Bearing

3. Retaining Ring, Ball Bearing

6. Backplate

7. Bearing, Short

8. Bearing, Long

10. Triple Lip Seal

11. Cartridge Seal

13. Packing Gland Clip

14. Packing Gland

15. Spring Clip

16. Packing Ring

19. Case
    A. Flanged Case - Right Angle
    B. Flanged Case - Thru

20. Case Gasket

21. Flange

22. Flange Gasket

23. Faceplate
    A. Plain
    B. RV Style Relief Valve
    C. BV Style Relief Valve

24. Relief Valve Cap

25. O-ring, Relief Valve Cap

26. Adjusting Screw

27. Nut, Lock, and Seal

29. Spring

30. Poppet/Spring Guide

32. Drive Shaft

33. Idler Shaft

34. Drive Gear

35. Idler Gear

36. Retaining Ring, Gear (BH)

37. Case Extender (65 size only)

57. Expansion Washer

WRN2 Warning Plate, RV

WRN3 Warning Plate, RV

WRN4 Warning Plate, RV

WRN5 Warning Plate, BV

A. Drive Key

B. Key, Gear

F. Locknut

G. Square Head Bolt

J. Dowel Pin

L. Hex Head Cap Screw, Endplates to Case

M. Hex Head Cap Screw, Flange

N. Flat Washer

S. Pipe Plug, Faceplate

AG. Stud

AH. Hex Head Cap Screw

AJ. Drive Screw

AK. Nut

Type BH Hydraulic Drive Bracket Assembly only

61. Bracket

62. Rigid Coupling

63. Retaining Ring

64. Socket Head Cap Screw

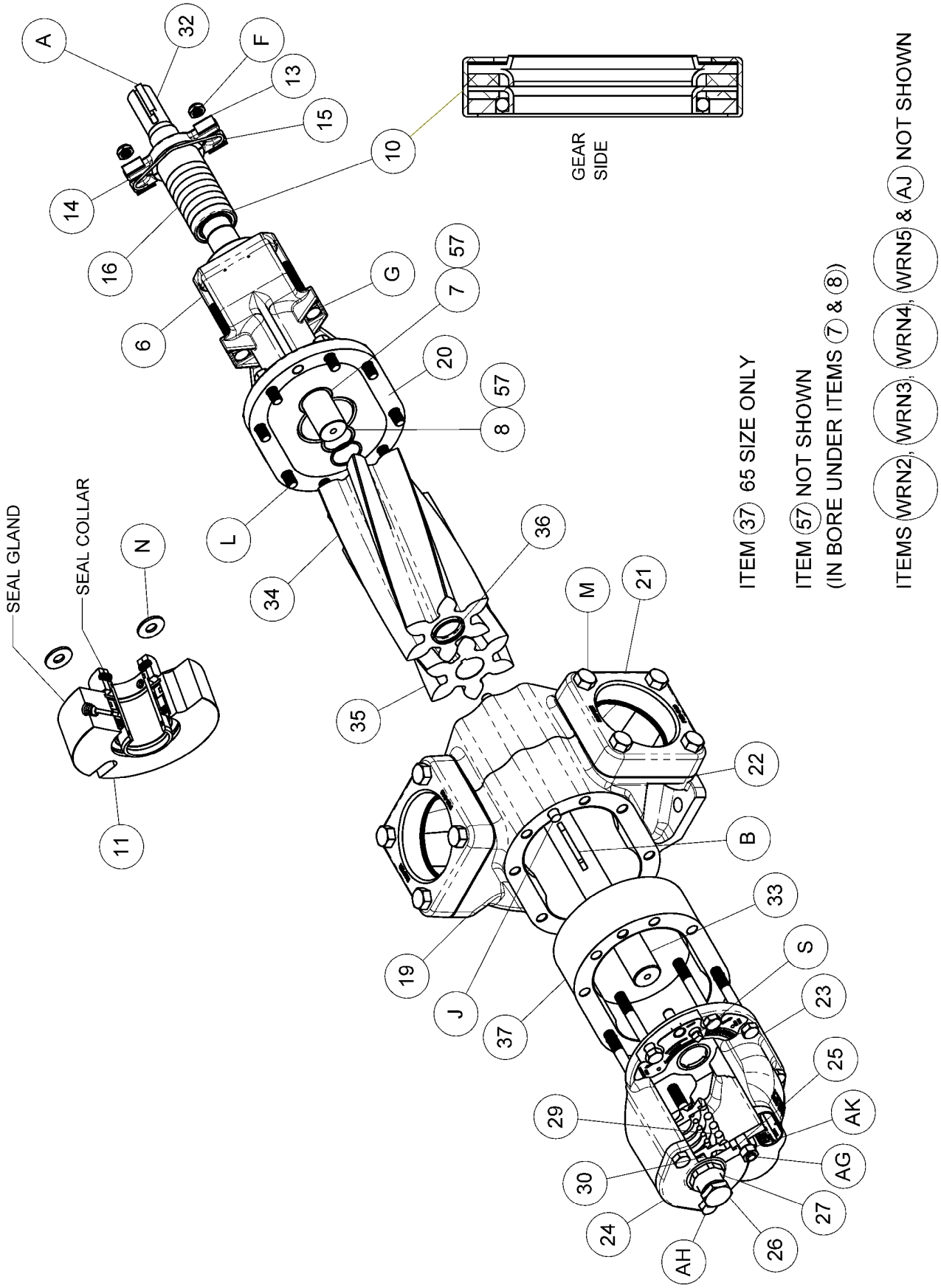

3248 – 4765 BHFRV
FIGURE 14.1

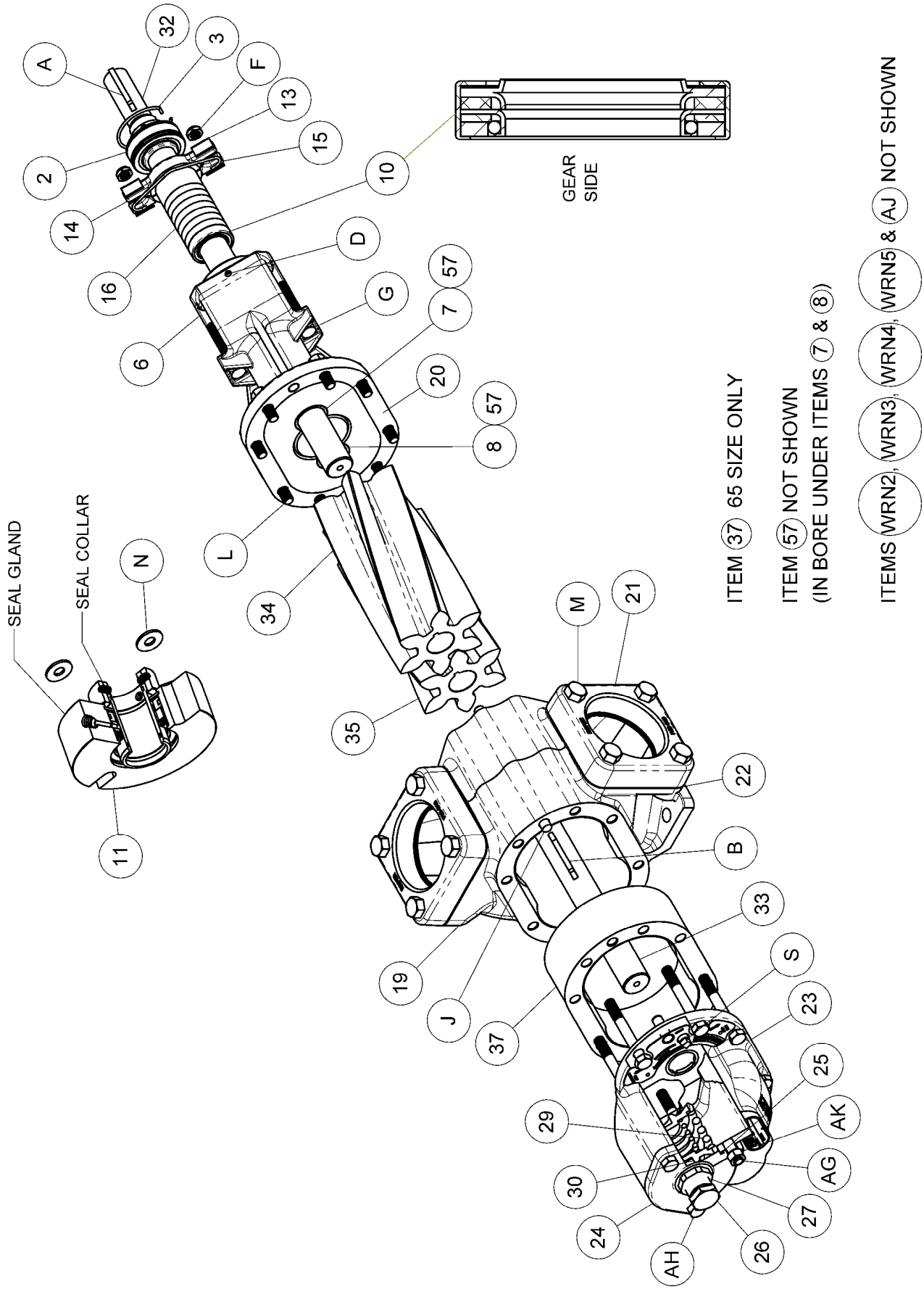

3248 – 4765 HBFRV
FIGURE 14.2

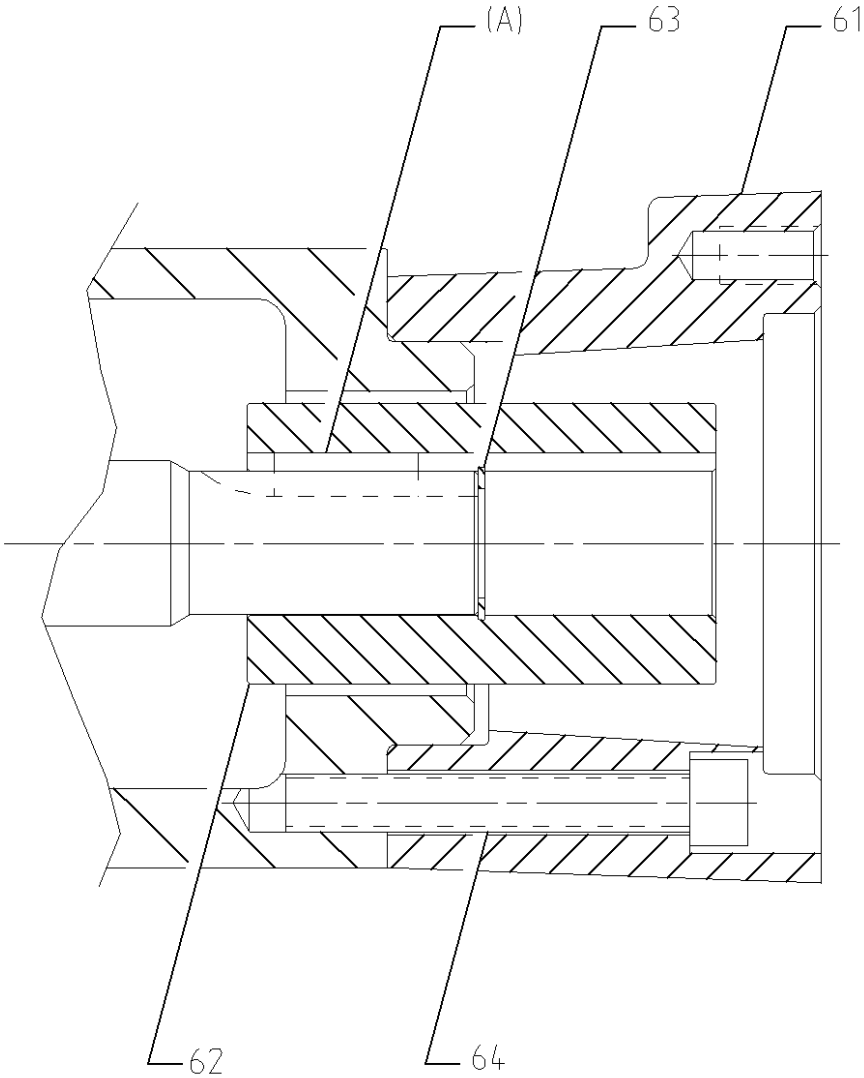

TYPE BH
HYDRAULIC DRIVE COUPLING ASSEMBLY
FIGURE 14.3

15. CONVERSION of 3x48 / 4x48 to eX 3x65 / 4x65

Refer to Section 14, **PUMP EXPLODED VIEWS.**

1. Read and understand all safety instructions and warnings before starting to disassemble pump. While disassembling pump, always inspect parts and adjacent parts to see if further disassembly is needed. Replace worn or damaged parts as required.

2. If you do not know which pump arrangement you have, collect nameplate data and refer to Section 1, **NAMEPLATE DATA**. Consult Roper Pump Company or an authorized distributor if there are any questions.

3. When cleaning or lubricating, use only cleaning solutions and lubricants that are compatible with products being pumped and with sealing elastomers.

4. Turn off pump and lock out energy source to driver. DO NOT proceed further with disassembly of pump it there is the slightest possibility that driver may be started.

5. Close inlet and discharge valves.

6. Remove guard and disconnect coupling between driver and pump.

7. Drain inlet and discharge lines. Disconnect lines from pump inlet and discharge.

8. Follow the procedure in Section 7, **INSTRUCTIONS FOR DRAINING PUMP**.

9. A.) For “HB” pumps, follow steps 11 - 17.

   B. For “BH” pumps, go to Section 12, **INSTRUCTIONS FOR DISASSEMBLY OF A TYPE “BH” HYDRAULIC DRIVE**. After disassembling hydraulic drive, return to this section and follow steps 11 - 17.

10. Remove eight hex head cap screws (L) securing faceplate (23A, B, C) to case (19A, B). Remove faceplate (23A. B. C).

11. Leave two dowel pins (J) attached to case.

12. Remove case gaskets (20).

13. A.) On “BH” pumps, remove faceplate end retaining ring (36) from drive shaft (32). Remove drive gear (34) and key (B).

    B.) On “HB” pumps, remove drive gear (34) and key (B) from drive shaft (32).

14. Remove idler shaft (33) with idler gear (35) and key (B).

15. On the opposite end of pump, remove drive key (A) from drive shaft (32).

16.
    A.) For 3200/4200 or 3600/4600 “BH” pumps, follow steps 17 - 19.

    B.) For 3200/4200 or 3600/4600 “HB” pumps, follow steps 20 - 24.

    C.) For 3700/4700 “BH” pumps, follow step 25.

    D.) For 3700/4700 “HB” pumps, follow steps 26 - 28.

3200/4200 or 3600/4600 “BH” Pumps (See Figure 14.1)

17. Remove two locknuts (F) from square head bolts (G) securing packing gland (14) in place. Remove packing gland clip (13), packing gland (14), spring clip (15), and two square head bolts (G).
18. Remove packing rings (16). Packing hooks are commercially available to assist in removal of packing rings. If 3200/4200 pump, remove triple lip seal (10). Discard packing rings and triple lip seal.
19. Remove drive shaft (32) and discard.

3200/4200 or 3600/4600 “HB” Pumps (See Figure 14.2)

20. Remove retaining ring (3) from backplate (6).
21. Loosen setscrews in ball bearing (2). Remove ball bearing.
22. Remove two locknuts (F) from square head bolts (G) securing packing gland (14) in place. Remove packing gland clip (13), packing gland (14), spring clip (15), and two square head bolts (G).
23. Remove packing rings (16). Packing hooks are commercially available to assist in removal of packing. Remove triple lip seal (10). Discard packing rings and triple lip seal.
24. Remove drive shaft (32) and discard.

3700/4700 “BH” Pumps (See Figure 14.1)

25. A.) For mech seal pump: remove two locknuts (F), seal retainer (not shown), and square head bolts (G) securing seal to backplate (6). Discard seal retainer. Remove seal and discard. Remove drive shaft (32) and discard.

    B). For cartridge seal pump: remove two locknuts (F) and two flat washers (N) from square head bolts (G) securing seal to backplate (6). Remove seal and discard. Remove drive shaft (32) with retaining ring (not shown) and discard both.

3700/4700 “HB” Pumps (See Figure 14.2)

26. Remove retaining ring (3) from backplate (6).
27. Loosen setscrews in ball bearing (2). Remove ball bearing.
28. A.) For mech seal pump: remove two locknuts (F), seal retainer (not shown), and square head bolts (G) securing seal to backplate (6). Discard seal retainer. Remove seal and discard. Remove drive shaft (32) and discard.

    B). For cartridge seal pump: remove two locknuts (F) and two flat washers (N) from square head bolts (G) securing seal to backplate (6). Remove seal and discard. Remove drive shaft (32) with retaining ring (not shown) and discard both.

To reassemble and complete the conversion, see Section 11, **INSTRUCTIONS FOR PUMP ASSEMBLY.**

16. INDEX

A

Assembly Instructions
- All, 24
- 3200/4200 “BH,” 24 - 25
- 3200/4200 “HB,” 25
- 3700/4700 “BH”, 25
- 3700/4700 “HB”, 26
- Relief Valve - RV Style, 12
- Relief Valve – BV Style, 15
- Type “BH” Hydraulic Drive, 27, 31

B

Bearing
- Installation, 22

C

Cartridge Seal,
- Installation of a SPS Cartridge Seal, 25 - 26
- Removal of a SPS Cartridge Seal, 21

Conversions
- High Drive to Low Drive, 17 – 18
- 3x48 4x48 to eX 3x65 / 4x65, 32 - 33

D

Dimensional Data, 23

Disassembly Instructions
- All, 20
- 3200/4200 “BH,” 21
- 3200/4200 “HB,” 21
- 3700/4700 “BH,” 21
- 3700/4700 “HB,” 21
- Relief Valve - RV Style, 11
- Relief Valve – BV Style, 15
- Type “BH” Hydraulic Drive, 27

Draining Pump, 19

F

Figure 5.1, 8
Figure 5.2, 9
Figure 5.3, 9
Figure 5.4, 10
Figure 5.5, 13
Figure 5.6, 13
Figure 5.7, 14
Figure 14.1, 29
Figure 14.2, 30
Figure 14.3, 31

H

Hydraulic Drive Coupling Assembly, 31

N

Nameplate Data, 4 - 5

P

Parts List, 28
Pre-operation Checks, 6
Pump Exploded Views, 28 - 30

R

Ratings
- Pressure, 6
- RV Relief Valve, 9
- BV Relief Valve, 13
- Speed, 6
- Temperature, 6

Relief Valves
- Adjusting RV Relief Valve, 12
- Adjusting BV Relief Valve, 15 - 16
- Position Change - RV Relief Valve, 13
- Standard RV Relief Valve, 9 - 12
- Standard BV Relief Valve, 13 - 16

Rotation
- Direction of Rotation and Relief Valves, 8 - 16
- Tags, 10 - 14
- Direction of Rotation for the RV Style Relief Valve, 10
- Direction of Rotation for the BV Style Relief Valve, 14

T

Tool List, 7
Triple Lip Seal with back-up Packing, 21, 24 - 25