FRX 75

3/4" x 3/4" End Suction Centrifugal Pump

Model FRX 75 is a high performance 316 stainless steel centrifugal pump. The pump is ideal for marine, agricultural, commercial or industrial transfer applications of compatible fluids.

The FRX75 model features all 316 stainless steel components for superior corrosion resistance when pumping chemical compounds. A carbon / ceramic / Viton bellows shaft seal is standard. Ports are ¾" NPT. Marine ignition protected motors available. Pump rotation in 90° increments.

SPECIFICATIONS:

Suction and Discharge	3/4" NPT x 3/4" NPT
Materials of Construction	316 stainless steel
Flow	Up to 28 GPM
Head Feet	Up to 38'
Impeller	316 stainless steel
	Semi-open (sintered PM)
Drive Options	Close coupled 115V AC
	Close coupled 12V DC
	Close coupled 230V AC
	Close coupled 24V DC
	Close coupled 32V DC
Seal	Carbon / ceramic / Viton bellows 150 PSI
	Special seals upon request
	Standard - carbon / ceramic / Viton

Application:

- Agricultural
- Commercial
- Industrial
- Marine
- OEM
- Transportation

FRX 75

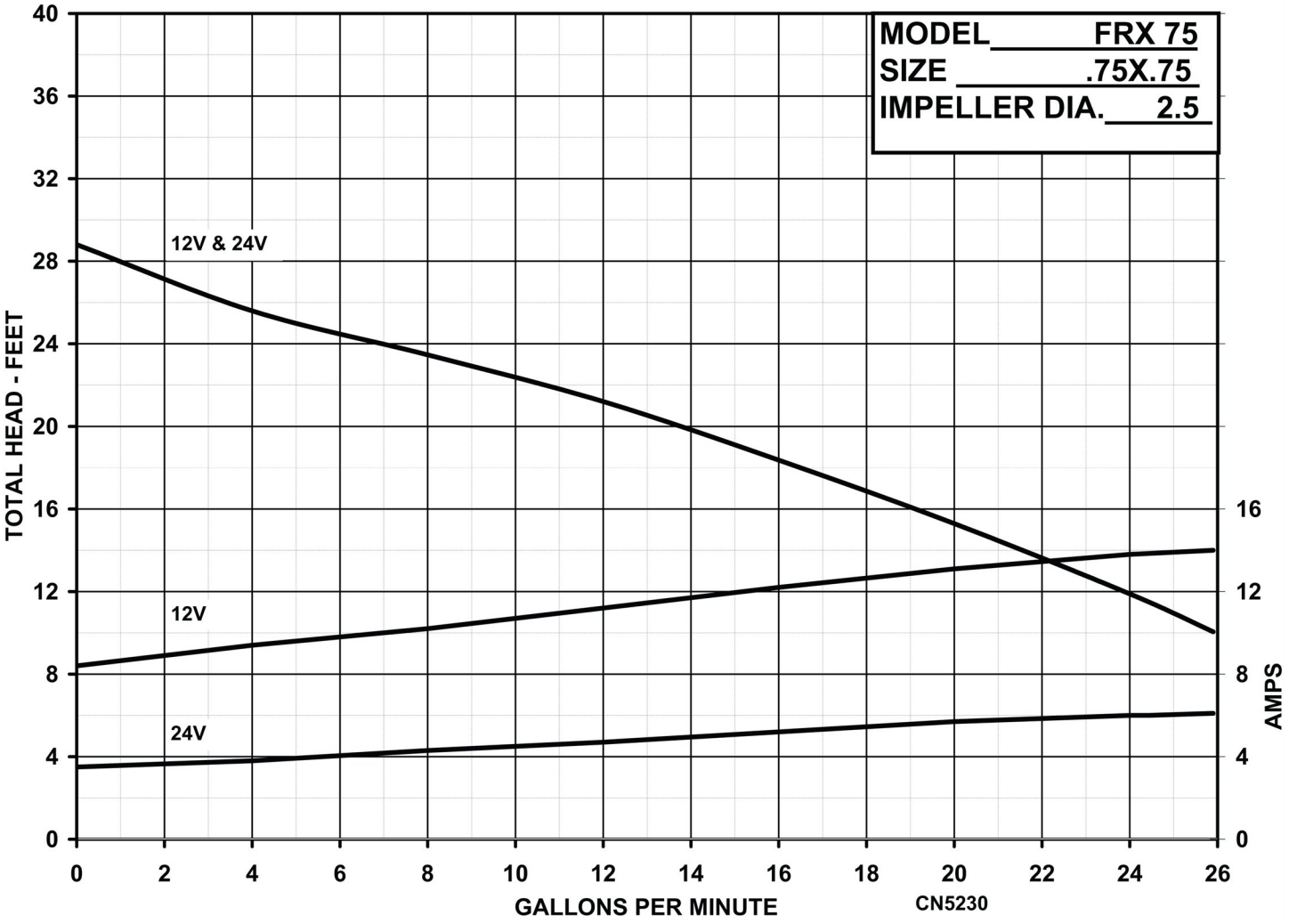

34800 BENNETT • FRASER, MI 48026-1686
(586) 293-8240 • FAX (586) 293-8469
(800) 563-8006 • www.mppumps.com

FRX 75

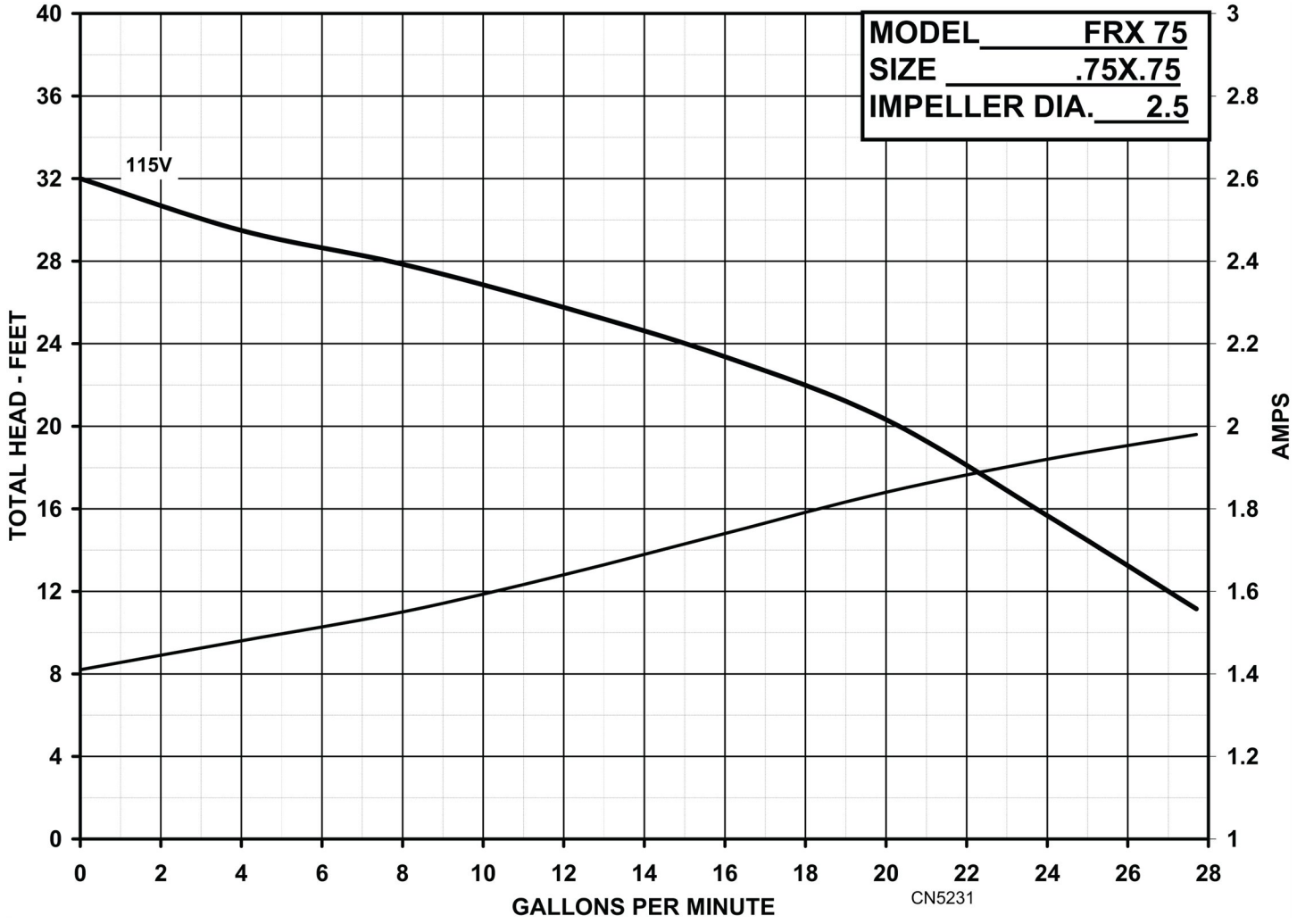

34800 BENNETT • FRASER, MI 48026-1686
(586) 293-8240 • FAX (586) 293-8469
(800) 563-8006 • www.mppumps.com

FRX 75

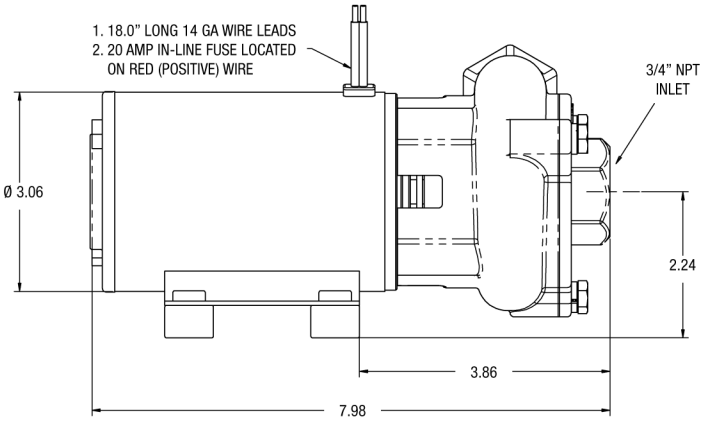

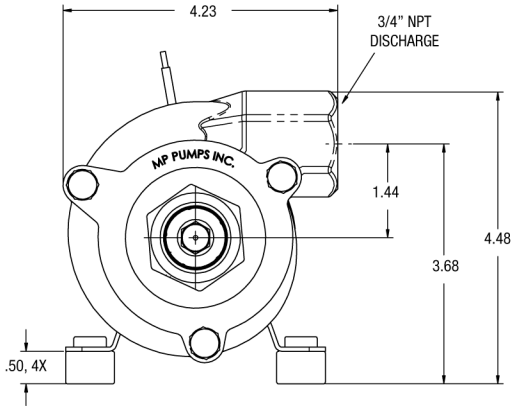

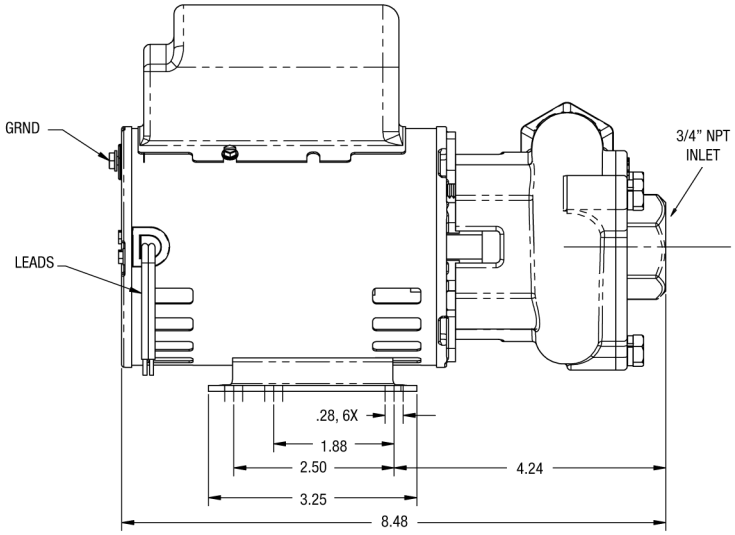

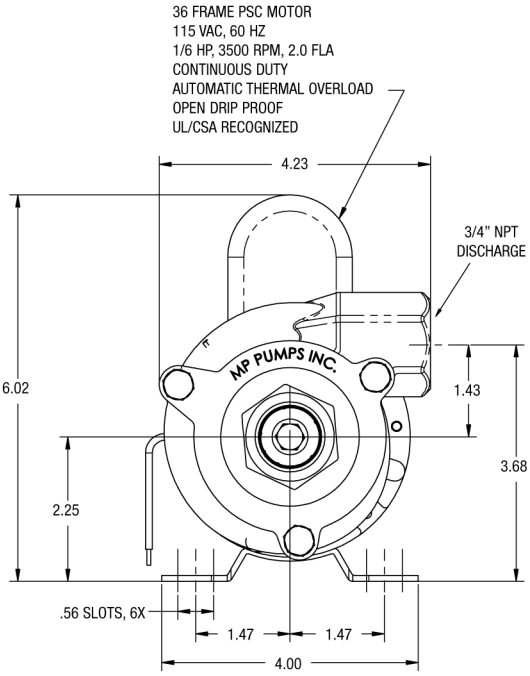

34800 BENNETT • FRASER, MI 48026-1686
(586) 293-8240 • FAX (586) 293-8469
(800) 563-8006 • www.mppumps.com

FRX 75

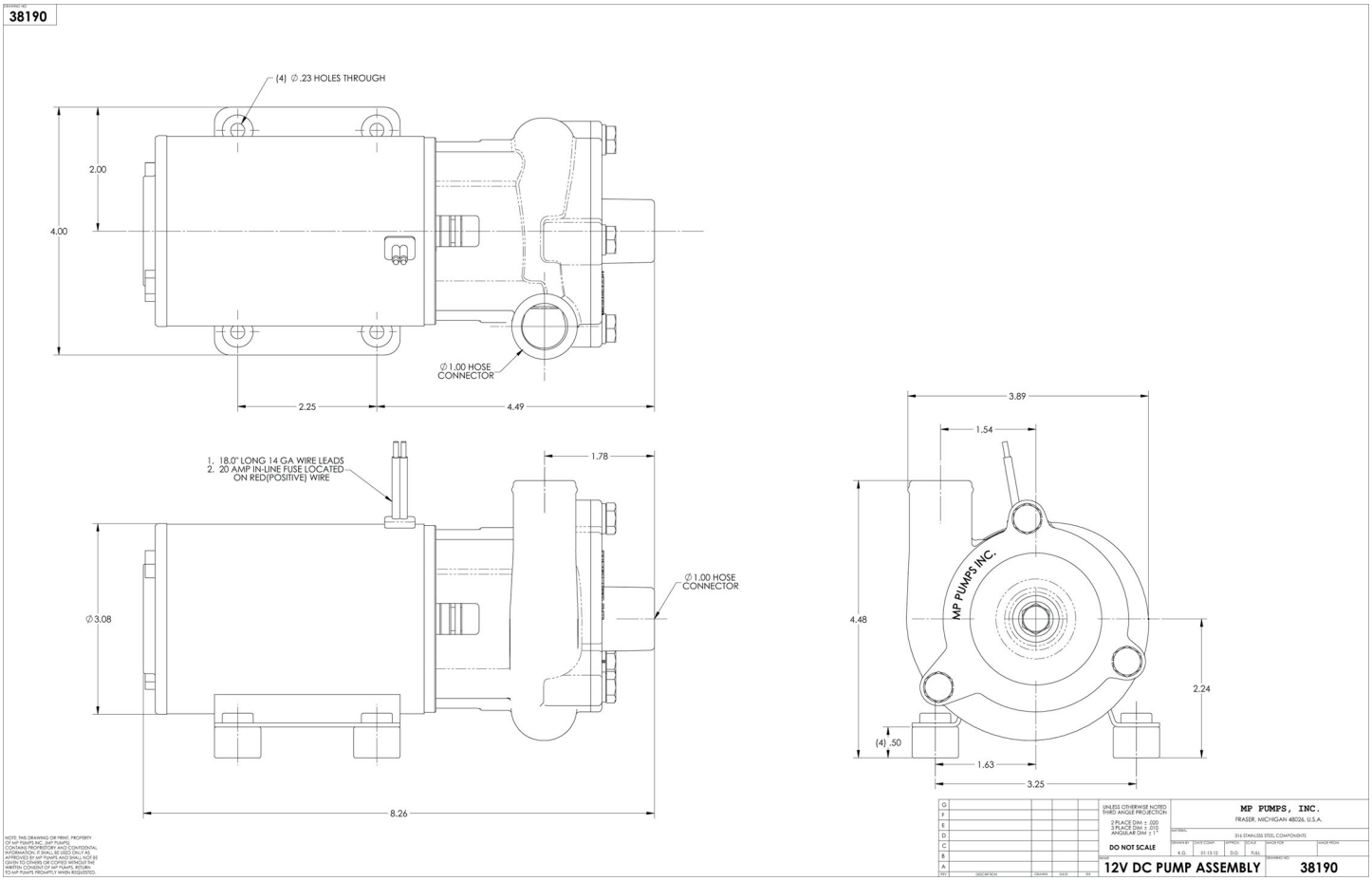

34800 BENNETT • FRASER, MI 48026-1686
(586) 293-8240 • FAX (586) 293-8469
(800) 563-8006 • www.mppumps.com

FRX 75

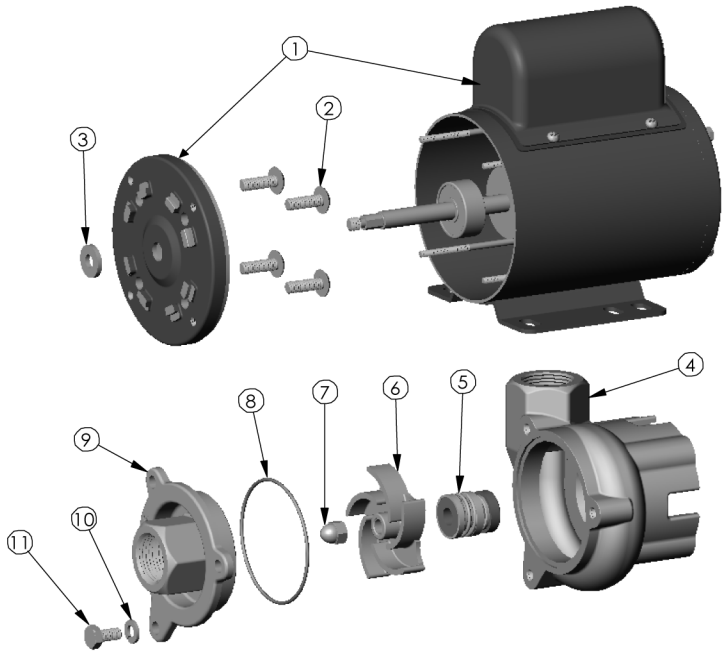

ITEM	QTY.	PART NO.	DESCRIPTION
1	1	35178	EL. MOTOR- 1115VAC, TENV
		35179	EL. MOTOR- 208-230VAC, TENV
		34411	EL. MOTOR- 115VAC, ODP
2	4	34969	1/4-20 X 3/4" TRUSS HD.SCREW
3	1	21627	RUBBER SLINGER
4	1	34032	HOUSING- 316 SS
5	1	34038	MECH. SEAL- CAR/CER VITON
		28841	MECH. SEAL- CAR/SIL. VITON
6	1	34033	IMPELLER- 316 SS
7	1	28766	ACORN NUT
8	1	34040	ORING- VITON
9	1	34035	COVER- 316 SS
10	3	33564	LOCKWASHER- 316 SS
11	3	34037	1/4-20 X 1/2" CAPSCREW

NOTE: MORE SEAL AND MOTOR OPTIONS AVAILABLE. CONSULT FA

34800 BENNETT • FRASER, MI 48026-1686
(586) 293-8240 • FAX (586) 293-8469
(800) 563-8006 • www.mppumps.com